ONLINE CERTIFICATIONS DIRECTORY

Design No. P522
BXUV.P522
Fire-resistance Ratings - ANSI/UL 263

Page Bottom

Design/System/Construction/Assembly Usage Disclaimer

- Authorities Having Jurisdiction should be consulted in all cases as to the particular requirements covering the installation and use of UL Certified products, equipment, system, devices, and materials.
- Authorities Having Jurisdiction should be consulted before construction.
- Fire resistance assemblies and products are developed by the design submitter and have been investigated by UL for compliance with applicable requirements. The published information cannot always address every construction nuance encountered in the field.
- When field issues arise, it is recommended the first contact for assistance be the technical service staff provided by the product manufacturer noted for the design. Users of fire resistance assemblies are advised to consult the general Guide Information for each product category and each group of assemblies. The Guide Information includes specifics concerning alternate materials and alternate methods of construction.
- Only products which bear UL's Mark are considered Certified.

Fire-resistance Ratings - ANSI/UL 263

See General Information for Fire-resistance Ratings - ANSI/UL 263

Design No. P522

July 01, 2013

Unrestrained Assembly Rating — 1 Hr

Finish Rating — 25 Min (See Items 3 or 3A)

Load Restricted for Canadian Applications — See Guide BXUV7

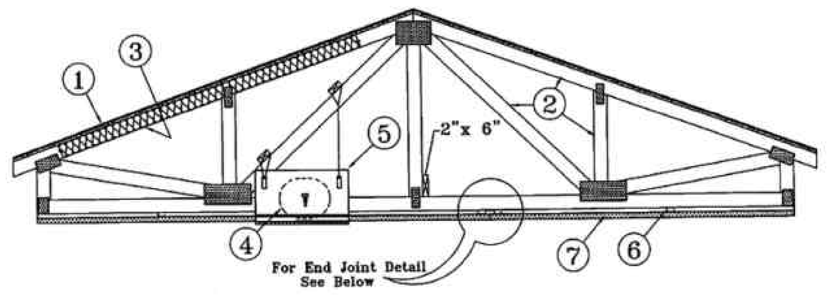

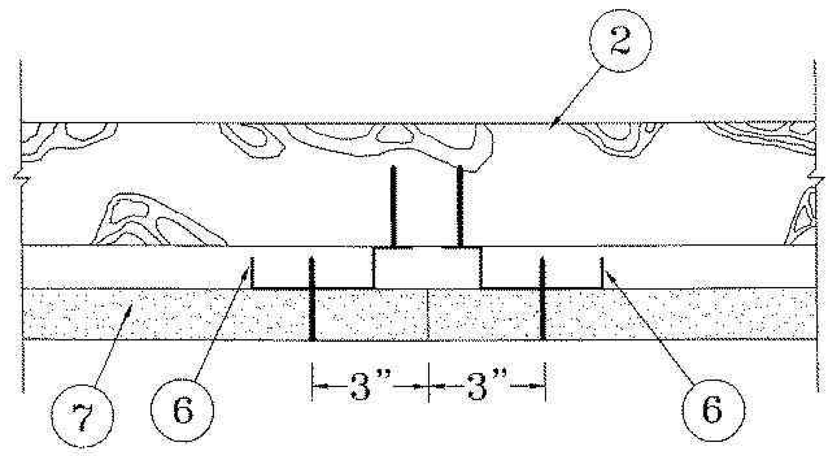

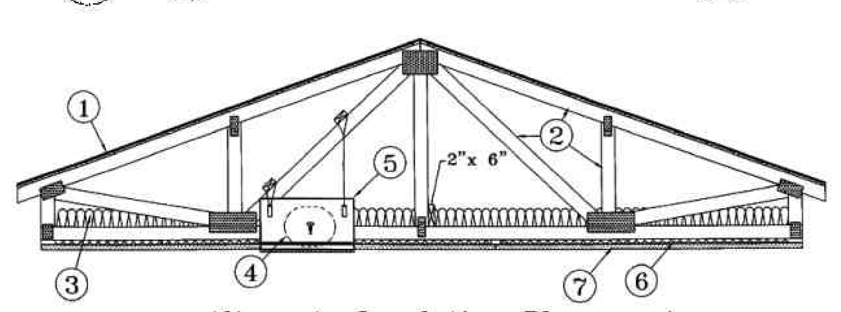

Alternate Insulation Placement

1. **Roofing System* —** Any UL Class A, B or C Roofing System (TGFU) or Prepared Roof Covering (TFWZ) acceptable for use over nom 15/32 in. thick wood structural panels, min. grade "C-D" or "Sheathing". Nom 15/32 in. thick wood structural panels secured to trusses with No. 6d ringed shank nails spaced 12 in. OC along each truss. Staples having equal or greater withdrawal and lateral resistance strength may be substituted for the 6d nails. Construction adhesive may be used with either the nails or staples.

2. **Trusses —** Pitched or parallel chord wood trusses, spaced a max of 24 in. OC, fabricated from nom 2 by 4 lumber, with lumber oriented vertically or horizontally. Truss members secured together with min. 0.0356 in. thick galv steel plates. Plates have 5/16 in. long teeth projecting perpendicular to the plane of the plate. The teeth are in pairs facing each other (made by the same punch), forming a split tooth type plate. Each tooth has a chisel point on its outside edge. These points are diagonally opposite each other for each pair. The top half of each tooth has a twist for stiffness. The pairs are repeated on approximately 7/8 in. centers with four rows of teeth per inch of plate width. Where the truss intersects with the interior face of the exterior walls, the min truss depth shall be 5-1/4 in. with a min roof slope of 3/12 and a min. area in the plane of the truss of 21 sq/ft. Where the truss intersects with the interior face of the exterior walls, the min truss depth may be reduced to 3 in. if the batts and blankets (Item 3) are used as shown in the above illustration (Alternate Insulation Placement) and are firmly packed against the intersection of the bottom chords and the plywood sheathing.

3. **Batts and Blankets* —** (Optional) - Required when Item 6B is used — Glass fiber insulation, secured to the wood structural panels with staples spaced 12 in. OC or to the trusses with 0.090 in. diam galv steel wires spaced 12 in. OC. Any glass fiber insulation bearing the UL Classification Marking as to Surface Burning Characteristics and/or Fire Resistance, having a min density of 0.5 pcf. As an option, the insulation may be fitted in the concealed space, draped over the resilient channel/gypsum board ceiling membrane when resilient channels and gypsum board attachment is modified as specified in Items 6 and 7. When **Steel Framing Members** (Item 6B) are used, max 3-1/2 in. thick insulation shall be draped over the furring channels (Item 6Ba) and gypsum board ceiling membrane, and friction-fitted between trusses and Steel Framing Members (Item 6Bd). The finished rating has only been determined when the insulation is secured to the decking.

3A. **Fiber, Sprayed* —** As an alternate to Item 3 (not evaluated for use with Item 6B) — Any thickness of

spray-applied cellulose insulation material, having a min density of 0.5 lb/ft^3, applied with water, over the resilient channel/gypsum board ceiling membrane when resilient channels and gypsum board attachment is modified as specified in Items 6 and 7. Fiber, Sprayed is applied with moisture in accordance with the application instructions supplied with the product. The finish rating when Fiber Sprayed is used has not been determined. Alternate application method: The fiber is applied without water or adhesive in accordance with the application instructions supplied with a minimum density of 0.5 lb/ft^3 over the resilient channel/gypsum board ceiling membrane when resilient channels and gypsum board attachment is modified as specified in Items 6 and 7. Alternate application method: The fiber is applied without water or adhesive to a nominal density of 3.5 lb/ft^3 behind netting (Item 9) stapled to the rafters. The netting is stapled at both lower edges of the rafters creating a cavity to accept the cellulose fiber.

U S GREENFIBER L L C — INS735 & INS745 for use with wet or dry application. INS510LD, INS515LD, INS541LD, INS735, INS745, INS765LD, and INS770LD are to be used for dry application only.

4. **Air Duct* —** Any UL Class 0 or Class 1 flexible air duct installed in accordance with the instructions provided by the damper manufacturer.

5. **Ceiling Damper* —** Max nom area, 324 sq in. Max square size, 18 in. by 18 in. rectangular sizes not to exceed 324 sq in. with a max width of 18 in. Max damper height is 14 in. Installed in accordance with manufacturers installation instructions provided with the damper. Max damper openings not to exceed 162 sq in. per 100 sq ft of ceiling area.

C&S AIR PRODUCTS — Model RD-521

POTTORFF — Model CFD-521

5A. **Alternate Ceiling Damper* —** Max nom area, 196 sq in. Max square size, 14 in. by 14 in. Rectangular sizes not to exceed 196 sq in. with a max width of 26 in. Max overall damper height is 7 in. Installed in accordance with the manufacturers installation instructions provided with the damper. Max damper openings not to exceed 98 sq in. per 100 sq ft of ceiling area.

C&S AIR PRODUCTS — Model RD-521-BT

POTTORFF — Model CFD-521-BT.

6. **Furring Channels —** Resilient channels formed of 25 MSG thick galv steel. Installed perpendicular to the trusses (Item 2), spaced a max of 16 in. OC when no insulation (Item 3 or 3A) is fitted in the concealed spaced, or a max of 12 in. OC when insulation (Item 3 or 3A) is fitted in the concealed space, draped over the resilient channel/gypsum board ceiling membrane. Two courses of resilient channel positioned 6 in. OC at wallboard butt-joints (3 in. from each end of wallboard). Channels oriented opposite at wallboard butt-joints. Channel splices overlapped 4 in. beneath wood trusses. Channels secured to each truss with 1-1/4 in. long Type S screws.

6A. **Steel Framing Members —** (Not Shown)* — As an alternate to Item 6, furring channels and Steel Framing Members as described below:

a. **Furring Channels —** Formed of No. 25 MSG galv steel. 2-9/16 in. or 2-23/32 in. wide by 7/8 in. deep, spaced 24 in. OC perpendicular to trusses when no insulation (Items 3 or 3A) is fitted in the concealed space or 12 in. OC when insulation (Items 3 or 3A) is fitted in the concealed space, draped over the furring channel/gypsum board ceiling membrane or 24 in. OC when insulation (Items 3 or 3A) is fitted in the concealed space, draped over the furring channel/gypsum board ceiling membrane and a second layer of gypsum board is attached as described in Item 7 for steel framing members. Channels secured to trusses as described in Item 6Ab. Ends of adjoining channels overlapped 6 in. and tied together with double strand of No. 18 SWG galv steel wire near each end of overlap.

b. **Steel Framing Members —** Used to attach furring channels (Item a) to trusses (Item 2). Clips spaced 48 in. OC. RSIC-1 and RSIC-1 (2.75) clips secured to alternating trusses with No. 8 by 2-1/2 in. coarse drywall screw through the center grommet. RSIC-V and RSIC-V (2.75) clips secured to alternating trusses with No. 8 by 1-1/2 in. coarse drywall screw through the center hole. Furring channels are friction fitted into clips. RSIC-1 and RSIC-V clips for use with 2-9/16 in. wide furring channels. RSIC-1 (2.75) and RSIC-V (2.75) clips for use with 2-23/32 in. wide furring channels. Adjoining channels are overlapped as described in Item 6Aa. As an alternate, ends of adjoining channels may be overlapped 6 in. and secured together with two self-tapping No. 6 framing screws, min. 7/16 in. long at the midpoint of the overlap, with one screw on each flange of the channel. Additional clips required to hold furring channel that supports the gypsum board butt joints, as described in Item 7.

PAC INTERNATIONAL INC — Types RSIC-1, RSIC-V, RSIC-1 (2.75), RSIC-V (2.75).

6B. **Steel Framing Members* —** (Not Shown) - As an alternate to Items 6 and 6A.

a. **Furring Channels —** Hat-shaped furring channels, 7/8 in. deep by 2-5/8 in. wide at the base and 1-1/4 in. wide at the face, formed from No. 25 ga. galv steel, spaced max 16 in. OC perpendicular to trusses and Cold Rolled Channels (Item 6Bb). Furring channels secured to Cold Rolled Channels at every intersection with a 1/2 in. pan head self-drilling screw through each furring channel leg. Ends of adjoining channels overlapped 4 in. and tied together with two double strand No. 18 SWG galv steel wire ties, one at each end of overlap. Supplemental furring channels at base layer and outer layer gypsum board butt joints are not required. Batts and Blankets draped over furring channels as described in Item 3. Two layers of gypsum board attached to furring channels as described in Item 7.

b. **Cold Rolled Channels —** 1-1/2 in. by 1/2 in., formed from No. 16 ga. galv steel, positioned vertically and parallel to trusses, friction-fitted into the channel caddy on the Steel Framing Members (Item 6Bd). Adjoining lengths of cold rolled channels lapped min. 6 in. and wire-tied together with two double strand 18 SWG galv steel wire ties, one at each end of overlap.

c. **Blocking —** Where truss design does not permit direct, full contact of the hanger bracket, a piece of nominal 2 by 4 in. lumber (blocking), min. 6 in. long to permit full contact of the hanger bracket, to be secured vertically to the side of the truss (Item 2) at the top and bottom of the blocking at each Steel Framing Member (Item 6Bd) location.

d. **Steel Framing Members* —** Hangers spaced 48 in. OC. max along truss, and secured to the Blocking (Item 6Bc) on alternating trusses with a single 5/16 in. by 2 in. hex head lag bolt or four #6 1-1/4 in. drywall screws through mounting hole(s) on the hanger bracket. The two 1/4 in. long steel teeth on the hanger are embedded in the side of the blocking. Hanger positioned on blocking and leveling bolt height adjusted such that furring channels are flush with bottom of trusses before gypsum board installation. Spring gauge of hanger chosen per manufacturer\'s instructions.

KINETICS NOISE CONTROL INC — Type ICW.

6C. **Steel Framing Members* —** (Not Shown) - As an alternate to Items 6, 6A and 6B.

a. **Furring Channels —** Formed of No. 25 MSG galv steel, 2-3/8 in. wide by 7/8 in. deep installed perpendicular to wood structural members. Channels spaced a max of 24 in. OC when no insulation (Item 3 or 3A) is fitted in the concealed space or a max of 12 in. OC when insulation (Item 3 or 3A) is fitted in the concealed space. Channels secured to trusses as described in Item 6Cb. Ends of adjoining channels overlapped 6 in. and tied together with double strand of No. 18 AWG galvanized steel wire near each end of overlap.

b. **Steel Framing Members* —** Used to attach furring channels (Item 6Ca) to trusses (Item 2). Clips secured to the bottom chord of each truss (24 in. OC) with one No. 8 by 2-1/2 in. long coarse drywall screw through center grommet. Furring channels are friction fitted into clips. Adjoining channels are overlapped as described in Item 6Ca. As an alternate, ends of adjoining channels may be overlapped 6 in. and secured together with two self-tapping No. 6 framing screws, min 7/16 in. long at the midpoint of the overlap, with one screw on each flange of the channel. Additional clips required to hold furring channel that supports the gypsum board butt joints, as described in Item 7.

PLITEQ INC — Type Genie Clip

6D. **Steel Framing Members* —** (Not Shown) - As an alternate to Items 6, 6A, 6B and 6C.

a. **Main runners —** Installed perpendicular to trusses — Nom 10 or 12 ft long, 15/16 in. or 1-1/2 in. wide face, spaced 4 ft OC. Main runners hung a min of 2 in. from bottom chord of trusses with 12 SWG galv steel wire. Wires located a max of 48 in. OC.

b. **Cross tees or channels —** Nom 4 ft long, 15/16 in. or 1-1/2 in. wide face or cross channels, nom 4 ft long, 1-1/2 wide face, installed perpendicular to the main runners, spaced 16 in. OC. Additional cross tees or channels used at 8 in. from each side of butted gypsum board end joints. The cross tees or channels may be riveted or screw-attached to the wall angle or channel to facilitate the ceiling installation.

c. **Wall angles or channels —** Used to support steel framing member ends and for screw-attachment of the gypsum wallboard — Min 0.016 in. thick painted or galvanized steel angle with 1 in. legs or min. 0.016 in. thick painted or galvanized steel channel with a 1 by 1-1/2 by 1 in. profile, attached to walls at perimeter of ceiling with fasteners 16 in. OC.

CGC INC — Type DGL or RX.

USG INTERIORS LLC — Type DGL or RX.

6E. **Alternate Steel Framing Members —** (Not Shown)* - As an alternate to items 6, 6A, 6B, and 6C, furring

channels and Steel Framing Members as described below.

a. **Furring Channels —** Formed of No. 25 MSG galv steel, 2-5/8 in. wide by 7/8 in deep, spaced 24 in OC, perpendicular to trusses. When insulation, Items 3 or 3A is used, the furring channel spacing shall be reduced to 12 in. OC. Channels secured to joists as described in Item b.

b. **Steel Framing Members* —** Used to attach furring channels (Item a) to the wood trusses (Item 2). Clips spaced at 24" OC and secured to the bottom of the trusses with one No. 10 x 2-1/2 Coarse Drywall Screw through the center hole. Furring channels are then friction fitted into clips. Ends of channels are overlapped 6" and screwed with four No. 8 x 1/2 Self Drilling screws (2 per side 1 in. and 4 in. from overlap edge). Additional clips are required to hold the Gypsum Butt joints and side joints as described in Item 7.

STUDCO BUILDING SYSTEMS — RESILMOUNT Sound Isolation Clips - Type A237 or A237R

7. **Gypsum Board* —** One layer of nom 5/8 in. thick by 48 in. wide boards, installed with long dimension parallel to trusses. Attached to the resilient channels using 1 in. long Type S bugle-head screws. Screws spaced a max of 12 in. OC along butted end-joints and in the field when no insulation (Item 3 or 3A) is fitted in the concealed spaced, or a max of 8 in. OC along butted end-joints and in the field when insulation (Item 3 or 3A) is fitted in the concealed space, draped over the resilient channel/gypsum board ceiling membrane.

When **Steel Framing Members*** (Item 6A or 6C) are used, sheets installed with long dimension perpendicular to furring channels and side joints of sheet located beneath trusses. Gypsum board screws are driven through channel spaced 12 in. OC in the field when no insulation (Item 3 or 3A) is fitted in the concealed space, or 8 in. OC in the field when insulation (Item 3 or 3A) is fitted in the concealed space, draped over the furring channel/gypsum board ceiling membrane. Gypsum board butt joints shall be staggered min. 2 ft within the assembly, and occur between the main furring channels. At the gypsum board butt joints, each end of the gypsum board shall be supported by a single length of furring channel equal to the width of the wallboard plus 6 in. on each end. The furring channels shall be spaced approximately 3-1/2 in. OC, and be attached to the trusses with one clip at each end of the channel. Screw spacing along the butt joint to attach the gypsum board to the furring channels shall be 8 in. OC. Second (outer) layer of gypsum board required when furring channels (Item 6A, a) are spaced 24 in. OC and insulation is fitted in the concealed space, draped over the furring channel/gypsum board ceiling membrane. Outer layer of gypsum board attached to the furring channels using 1-5/8 in. long Type S bugle-head screws spaced 8 in. OC at butted joints and 12 in. OC in the field. Butted end joints of outer layer to be offset a minimum of 8 in. from base layer end joints. Butted side joints of outer layer to be offset minimum 18 in. from butted side joints of base layer.

When **Steel Framing Members** (Item 6B) are used, two layers of nom 5/8 in. thick, 4 ft wide gypsum board are installed with long dimensions perpendicular to furring channels (Item 6Ba). Base layer attached to the furring channels using 1 in. long Type S bugle head steel screws spaced 8 in. OC along butted end joints and 12 in. OC in the field of the board. Butted end joints centered on the continuous furring channels. Butted base layer end joints to be offset a min of 16 in. in adjacent courses. Outer layer attached to the furring channels using 1-5/8 in. long Type S bugle head steel screws spaced 8 in. OC at butted end joints and 12 in. OC in the field. Butted end joints centered on the continuous furring channels and offset a min of 16 in. from butted end joints of base layer. Butted side joints of outer layer to be offset min 16 in. from butted side joints of base layer.

When **Steel Framing Members** (Item 6C) are used, one layer of nom 5/8 in. thick, 4 ft wide gypsum board is installed with long dimensions perpendicular to furring channels. Gypsum board secured to furring channels with nom 1 in. long Type S bugle-head steel screws spaced 8 in. OC in the field of the board. Gypsum board butted end joints shall be staggered minimum 72 in. At the gypsum board butt joints, each end of each gypsum board shall be supported by a single length of furring channel equal to the width of the gypsum board plus 3 in. on each end, spaced approximately 2 in. in from joint. Screw spacing along the gypsum board butt joint shall be 8 in. OC. Butt joint furring channels shall be attached with a RESILMOUNT Sound Isolation Clip secured to underside of every truss that is located over the butt joint. Over all Gypsum Board side joints, approximately 20 in. lengths of furring channel shall be installed parallel to trusses (Item 2) between main furring channels. Side joint furring channels shall be attached to underside of the joist with RESILMOUNT Sound Isolation Clips - located approximately 2 in. from each end of the approximate 20 in. length of channel. Both Gypsum Boards at side joints fastened into channel with screws spaced 8 in. OC, approximately 1/2 in. from joint edge.

CGC INC — Types C, IP-X2, IPC-AR.

UNITED STATES GYPSUM CO — Types C, IP-X2, IPC-AR.

USG MEXICO S A DE C V — Types C, IP-X2, IPC-AR.

7A. **Gypsum Board* —** For use with Steel Framing Members (Item 6D) when Batts and Blankets* (Item 3) are not used - One layer of nom 5/8 in. thick by 48 in. wide boards, installed with long dimension parallel to the main runners. Gypsum board fastened to each cross tee or channel with five wallboard screws, with one screw located at the midspan of the cross tee or channel, one screw located 12 in. from and on each side of the cross tee or channel mid span and one screw located 1-1/2 in. from each gypsum board side joint. Except at wallboard end joints, wallboard screws shall be located on alternating sides of cross tee flange. At

gypsum board end joints, gypsum board screws shall be located 1/2 in. from the joint. Gypsum board fastened to main runners with wallboard screws 1/2 in. from side joints, midway between intersections with cross tees or channels (16 in. OC). End joints of adjacent gypsum board sheets shall be staggered not less than 32 in. Gypsum board sheets screw attached to leg of wall angle with wallboard screws spaced 12 in. OC. Joints treated as described in Item 7. For use with **Steel Framing Members*** (Item 6D) when **Batts and Blankets*** (Item 3) are used - Ratings limited to 1 Hour - 5/8 in. thick, 4 ft wide; installed with long dimension perpendicular to cross tees with side joints centered along main runners and end joints centered along cross tees. Fastened to cross tees with 1 in. long steel gypsum board screws spaced 8 in. OC in the field and 8 in. OC along end joints. Fastened to main runners with 1 in. long gypsum board screws spaced midway between cross tees. Screws along sides and ends of boards spaced 3/8 to 1/2 in. from board edge. End joints of the sheets shall be staggered with spacing between joints on adjacent boards not less than 4 ft OC.

CGC INC — Type C or IP-X2.

UNITED STATES GYPSUM CO — Type C or IP-X2.

USG MEXICO S A DE C V — Type C or IP-X2.

8. **Finishing System —** (Not Shown) — Vinyl, dry or premixed joint compound, applied in two coats to joints and screw-heads; paper tape, 2 in. wide, embedded in first layer of compound over all joints. As an alternate, nom 3/32 in. thick veneer plaster may be applied to the entire surface of gypsum board.
Alternate Ceiling Membrane — Not Shown.

9. **Netting —** Fibrous, woven netting material fastened to underside of each joist with staples, with side joints overlapped.

*Bearing the UL Classification Mark

Last Updated on 2013-07-01

Questions? Print this page Terms of Use Page Top

© 2014 UL LLC

R1 — UL P522 ROOF WD TRUSS 1HR — 1 HR RATED - UL DESIGN No. P522

SCALE: 1' = 1'-0"

ONLINE CERTIFICATIONS DIRECTORY

Design No. P523
BXUV.P523
Fire-resistance Ratings - ANSI/UL 263

Page Bottom

Design/System/Construction/Assembly Usage Disclaimer

- Authorities Having Jurisdiction should be consulted in all cases as to the particular requirements covering the installation and use of UL Certified products, equipment, system, devices, and materials.
- Authorities Having Jurisdiction should be consulted before construction.
- Fire resistance assemblies and products are developed by the design submitter and have been investigated by UL for compliance with applicable requirements. The published information cannot always address every construction nuance encountered in the field.
- When field issues arise, it is recommended the first contact for assistance be the technical service staff provided by the product manufacturer noted for the design. Users of fire resistance assemblies are advised to consult the general Guide Information for each product category and each group of assemblies. The Guide Information includes specifics concerning alternate materials and alternate methods of construction.
- Only products which bear UL's Mark are considered Certified.

Fire-resistance Ratings - ANSI/UL 263

See General Information for Fire-resistance Ratings - ANSI/UL 263

Design No. P523

February 28, 2014

Restrained Assembly Rating — 1 and 1-1/2 Hr (See Items 6, 8)

Unrestrained Assembly Rating — 1 and 1-1/2 Hr (See Items 6, 8 and 8A)

Load Restricted for Canadian Applications — See Guide BXUV7

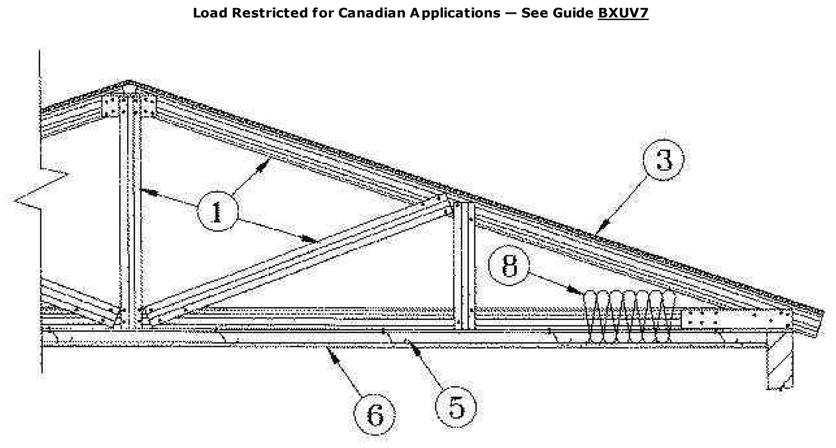

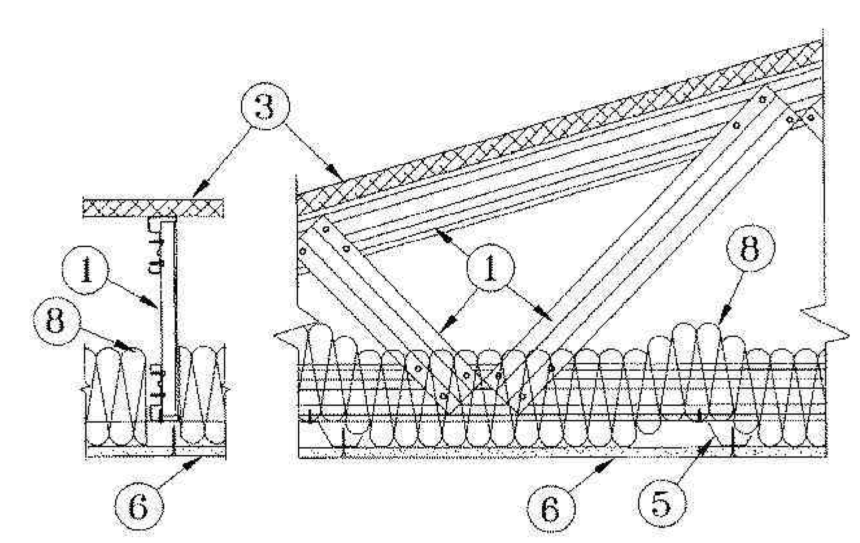

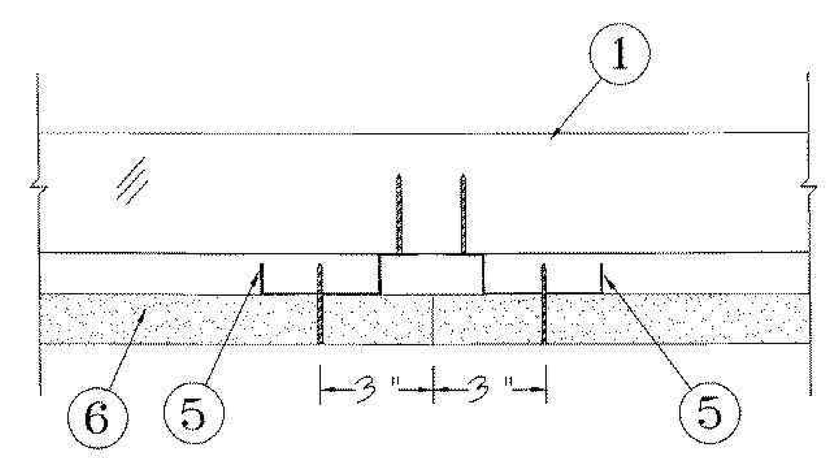

END JOINT DETAIL

1. **Structural Steel Members* —** Pre-fabricated light-gauge steel truss system consisting of cold-formed, galvanized steel chord and web sections. Trusses fabricated in various sizes, depths and from various steel thicknesses. Trusses spaced a max of 48 in. OC.

AEGIS METAL FRAMING, DIV OF MITEK — Ultra-Span, Pre-fabricated Light Gauge Steel Truss System

2. **Bridging —** (Not Shown) — Location of lateral bracing for truss chord and web sections to be specified on truss engineering.

3. **Roof system* —** Any UL Class A, B or C Roofing System (TGFU) or Prepared Roof Covering (TFWZ) acceptable for use over nom 23/32 in. thick wood structural panels, min grade "C-D" or "Sheathing" . Nom 23/32 in. thick wood structural panels mechanically fastened to top chord of steel trusses with 1-1/4 in. long

Type S or S-12 steel screws spaced a max of 12 in. OC. As an option, the wood structural panels may be installed to min 20 ga. steel purlins or steel hat channels. Steel purlins or hat channels to be spaced a max 24 in. OC and welded or mechanically fastened, transverse to steel roof trusses (Item 1).

3A. **Steel Roof Deck —** Not Shown — In lieu of, or in addition to the wood structural panels described in Item 3, the steel roof deck may consist of corrugated or fluted steel form units, minimum 9/16 in. deep, 22 MSG painted or galv steel, welded or mechanically fastened at a max. 12 in. OC to the top chord of the roof trusses (Item 1). When used in addition to the wood structural panels described in Item 3, Batts and Blankets (Item 8) is optional. When used lieu of the wood structural panels described in Item 3, Batts and Blankets (Item 8) must be used and the Class A, B or C Roofing System must include a min 3/4 in. thickness of roof insulation or 1/2 in. thickness of Classified or unclassified gypsum boards. If polystyrene roof insulation is used, it must be installed on top of a min 1/2 in. thickness of Classified or unclassified gypsum boards .

3B. **Structural Cement-Fiber Units* —** (Not Shown) — In lieu of the wood structural panels described in Item 3, steel roof deck and structural cement-fiber units may be installed. The steel roof deck is to consist of corrugated or fluted steel form units, minimum 9/16 in. deep, 22 MSG painted or galv steel, welded or mechanically fastened at a max. 12 in. OC to the top chord of the roof trusses (Item 1). Nominal 19 mm (3/4 in.) thick structural cement-fiber units installed over the steel roof deck and secured to trusses with fasteners spaced a max of 12 in. OC. Batts and Blankets (Item 8) must be used and the Class A, B or C Roofing System must include application over structural cement-fiber units.

US ARCHITECTURAL PRODUCTS INC — Type Versaroc

3C. **Structural Cement-Fiber Units* —** (Not Shown) — In lieu of the wood structural panels described in Item 3, steel roof deck and structural cement-fiber units may be installed. The steel roof deck is to consist of corrugated or fluted steel form units, minimum 9/16 in. deep, 22 MSG painted or galv steel, welded or mechanically fastened at a max. 12 in. OC to the top chord of the roof trusses (Item 1). Nominal 19 mm (3/4 in.) thick structural cement-fiber units installed over the steel roof deck and secured to trusses with fasteners spaced a max of 12 in. OC. Batts and Blankets (Item 8) must be used and the Class A, B or C Roofing System must include application over structural cement-fiber units.

ECTEK INTERNATIONAL INC — Armoroc Panel

4. **Vapor Barrier —** (Not Shown) — Optional — Commercial asphalt saturated felt, 0.030 in. thick, applied over the wood structural panels.

5. **Furring Channels —** Resilient channels formed of 25 MSG galv steel, installed perpendicular to the steel trusses (Item 1) when steel trusses are spaced a max 24 in. OC. Relilient channels spaced a max of 16 in. OC when no insulation (Item 8 or 8A) is fitted in the concealed space, or a max of 12 in. OC when insulation (Item 8 or 8A) is fitted in the concealed space, draped over the resilient channel/gypsum wallboard ceiling membrane. Two courses of resilient channel positioned 6 in. OC at wallboard butt-joints (3 in. from each end of wallboard). Channels oriented opposite at wallboard butt-joints. Channel splices overlapped 4 in. beneath steel trusses. Channels secured to each truss with Type S12 by 1/2 in. long screws.

5A. **Furring Channels —** (Not Shown) — As an alternate to Item 5 — Hat channels min 20 MSG galv steel, min 2-5/8 in. wide by min 7/8 in. deep, installed perpendicular to the trusses (Item 1) spaced a max of 16 in. OC. When no insulation (Item 8 or 8A) is fitted in the concealed space, or a max 12 in. OC when insulation (Item 8 or 8A) is fitted in the concealed space, draped over the hat channel/gypsum board ceiling membrane . Two courses of channel positioned 6 in. OC, 3 in. from each end of wallboard. Channel splices overlapped 6 in. beneath steel trusses. Channels secured to each truss with No. 18 SWG steel wire double strand saddle ties. Channels tied together with double strand of No. 18 SWG steel wire at each end overlap.

5B. **Furring Channels —** As an alternate to Items 5 and 5A , resilient channels, double legged formed of 25 MSG galv steel, 2-7/8 in. wide by 1/2 in. deep, installed perpendicular to the trusses (Item 1) spaced max 16 in. OC when no insulation (Item 8 or 8A) is fitted in the concealed space, or a max of 12 in. OC when insulation (Item 8 or 8A) is fitted in the concealed space, draped over the resilient channel/gypsum wallboard ceiling membrane. Two courses of resilient channel positioned 6 in. OC at wallboard butt-joints (3 in. from each end of wallboard). Channel splices overlapped 4 in. beneath steel trusses. Channels secured to each truss with Type S12 by 1/2 in. long screws or with No. 18 SWG galv steel wire double strand saddle ties. Channels tied together with double strand of No. 18 SWG galv steel wire at each end of overlap.

6. **Gypsum Board* —** For the 1 Hr. Ratings - One layer of nom 5/8 in. thick by 48 in. wide boards, installed with long dimension parallel to trusses. Attached to the resilient channels using 1 in. long Type S bugle-head screws. Screws spaced a max of 12 in. OC along butted end-joints and in the field when no insulation (Item 8 or 8A) is fitted in the concealed space or a max of 8 in. OC along butted end-joints and in the field when insulation (Item 8 or 8A) is fitted in the concealed space, draped over the resilient channel/gypsum wallboard ceiling membrane. For the 1-1/2 Hr. Ratings - Two layers of nom 5/8 in. thick by 48 in. wide boards, installed with long dimension parallel to trusses. Base layer attached to the resilient channels using 1 in. long Type S bugle-head screws spaced a max of 8 in. OC along butted end-joints and in the field. Face layer attached to the resilient channels using 1-5/8 in. long Type S bugle-head screws spaced a max of 8 in. OC along butted end-joints and in the field. Screws staggered from base layer screws. Face layer side and end joints offset a min 16 in. from base layer side and end joints.

CGC INC — Types C, IP-X2, IPC-AR.

UNITED STATES GYPSUM CO — Types C, IP-X2, IPC-AR.

USG MEXICO S A DE C V — Types C, IP-X2, IPC-AR.

7. **Finishing System —** (Not shown) — Vinyl, dry or premixed joint compound, applied in two coats to joints and screw-heads; paper tape, 2 in. wide, embedded in first layer of compound over all joints. As an alternate, nom 3/32 in. thick veneer plaster may be applied to the entire surface of gypsum wallboard.

8. **Batts and Blankets* —** Optional for the 1 Hr. Ratings - Any thickness mineral wool or glass fiber insulation bearing the UL Classification Marking for Surface Burning Characteristics, having a flame spread value of 25 or less and a smoke spread value of 50 or less. Insulation fitted in the concealed space, draped over the resilient channel/gypsum wallboard ceiling membrane. Mandatory for the 1-1/2 Hr. Ratings-Min 9-1/2 in. thick glass fiber insulation bearing the UL Classification Marking for Surface Burning Characteristics, having a flame spread value of 25 or less and a smoke spread value of 50 or less. Insulation fitted in the concealed space, draped over the resilient channel/gypsum wallboard ceiling membrane.

8A. **Loose Fill Material* —** As an alternate to Item 8 — Optional for the 1 Hr. Ratings — Any thickness of loose fill material bearing the UL Classification Marking for Surface Burning Characteristics, having a flame spread value of 25 or less and a smoke spread value of 50 or less. Insulation fitted in the concealed space, draped over the resilient channel/gypsum wallboard ceiling membrane. Mandatory for the 1-1/2 Hr. Ratings - Min 9-1/2 in. thickness of loose fill material bearing the UL Classification Marking for Surface Burning Characteristics, having a flame spread value of 25 or less and a smoke spread value of 50 or less. Insulation fitted in the concealed space, draped over the resilient channel/gypsum wallboard ceiling membrane.

Alternate Ceiling Membrane — Not Shown.

9. **Steel Framing Members —**

a. **Main Runners —** Installed perpendicular to Structural Steel Members — Nom 10 or 12 ft long, 15/16 in. or 1-1/2 in. wide face, spaced 4 ft OC. Main runners hung a min of 2 in. from bottom chord of Structural Steel Members with 12 SWG galv steel wire. Wires located a max of 48 in. OC.

b. **Cross tees or channels —** Nom 4 ft long, 15/16 in. or 1-1/2 in. wide face, or cross channels, nom 4 ft long, 1-1/2 in. wide face, installed perpendicular to the main runners, spaced 16 in. OC. Additional cross tees or channels used at 8 in. from each side of butted wallboard end joints. The cross tees or channels may be riveted or screw-attached to the wall angle or channel to facilitate the ceiling installation.

c. **Wall angles or channels —** Used to support steel framing member ends and for screw-attachment of the gypsum wallboard — Min 0.016 in. thick painted or galvanized steel angle with 1 in. legs or min. 0.016 in.thick painted or galvanized steel channel with a 1 by 1-1/2 by 1 in. profile, attached to walls at perimeter of ceiling with fasteners 16 in. OC.

CGC INC — Type DGL or RX

USG INTERIORS LLC — Type DGL or RX

10. **Gypsum Board* —** For use with Steel Framing Members (Item 9) when Batts and Blankets* (Item 8) are not used - One layer of nominal 5/8 in. thick by 48 in. wide boards, installed with long dimension parallel to the main runners. Wallboard fastened to each cross tee or channel with five wallboard screws, with one screw located at the midspan of the cross tee or channel, one screw located 12 in. from and on each side of the cross tee or channel mid span, and one screw located 1-1/2 in. from each wallboard side joint. Except at wallboard end joints, wallboard screws shall be located on alternating sides of cross tee flange. At wallboard end joints, wallboard screws shall be located 1/2 in. from the joint. Wallboard fastened to main runners with wallboard screws 1/2 in. from side joints, midway between intersections with cross tees or channels (16 in. OC). End joints of adjacent wallboard sheets shall be staggered not less than 32 in. Wallboard sheets screw attached to leg of wall angle with wallboard screws spaced 12 in. OC. Joints treated as described in Item 7. For use with **Steel Framing Members*** (Item 9) when **Batts and Blankets*** (Item 8) are used - Ratings limited to 1 Hour- 5/8 in. thick, 4 ft wide; installed with long dimension perpendicular to cross tees with side joints centered along main runners and end joints centered along cross tees. Fastened to cross tees with 1 in. long steel wallboard screws spaced 8 in. OC in the field and 8 in. OC along end joints. Fastened to main runners with 1 in. long wallboard screws spaced midway between cross tees. Screws along sides and ends of boards spaced 3/8 to 1/2 in. from board edge. End joints of the sheets shall be staggered with spacing between joints on adjacent boards not less than 4 ft OC.

CGC INC — Type C, IP-X2, IPC-AR

UNITED STATES GYPSUM CO — Type C, IP-X2, IPC-AR

USG MEXICO S A DE C V — Type C, IP-X2, IPC-AR

*Bearing the UL Classification Mark

R2 — UL P523 ROOF MTL TRUSS 1HR — 1 HR RATED - UL DESIGN No. P523

SCALE: 1' = 1'-0"

ROOF-CEILING SYSTEMS

GA FILE NO. RC 2601	GENERIC	1 HOUR FIRE

GYPSUM WALLBOARD, WOOD JOISTS, ROOF COVERING

Base layer 5/8" type X gypsum wallboard applied at right angles to 2 X 10 wood joists 24" o.c. with 1 1/4" Type W or S drywall screws 24" o.c. **Face** layer 5/8" type X gypsum wallboard or gypsum veneer base applied at right angles to joists with 1 7/8" Type W or S drywall screws 12" o.c. at joints and intermediate joists and 1 1/2" Type G drywall screws 12" o.c. placed 2" back on either side of end joints. Joints offset 24" from base layer joints. Wood joists supporting 1/2" plywood with exterior glue applied at right angles to joists with 8d nails. Appropriate roof covering. **Ceiling provides one hour fire resistance protection for wood framing, including trusses.**

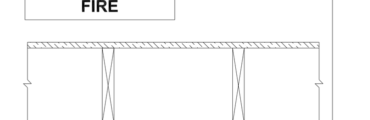

Approx. Ceiling Weight: 5 psf
Fire Test: FM FC 172, 2-25-72; ITS, 8-6-98

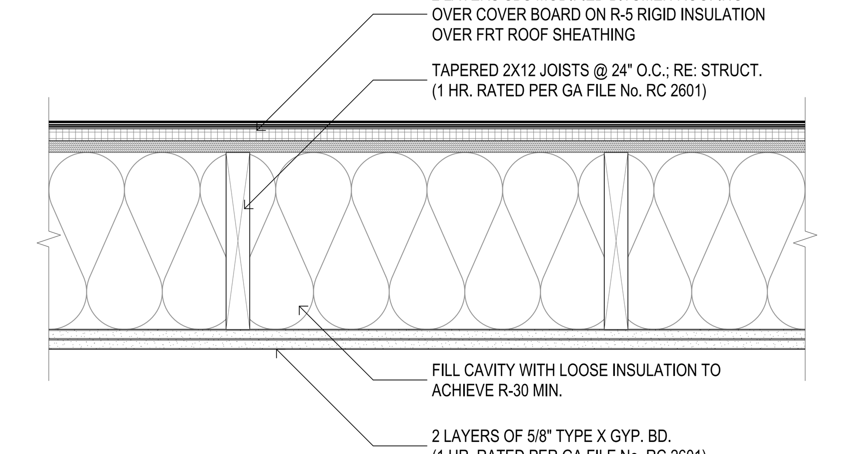

AS PER NFPA 13 SECTION 8.15.1.2.6 SPRINKLER HEADS MAY NOT BE REQUIRED IN CONCEALED FLOOR SPACES WHEN THE VOLUME IS LESS THAN 160 CU. FT. OR FILLED FULL HEIGHT WITH APPROVE LOOSE INSULATION

REFER TO STRUCTURAL DRAWINGS FOR DIRECTION OF JOISTS AND LOCATIONS OF RIM BOARDS AND STRUCTURAL PANELS.

R3 — WD CEILING/ROOF R3 - LOW SLOPED MECH ROOF — 1 HR RATED - GA FILE No. RC 2601

SCALE: 1 1/2"= 1'-0"

NOTE: CONTRACTOR TO VERIFY AND USE THE LATEST AND THE MOST UP-TO-DATE UNITED LABRATORY DESIGN LISTING.

pi architects
3500 Jefferson St, Suite 303
Austin, TX 78731
P: (512) 231-1910
F: (512) 231-1950
www.piarch.com
architecture + master planning
interiors + landscape architecture

GREG P. HUNTEMAN REG. NO. 8378 STATE OF LOUISIANA REGISTERED ARCHITECT
03/31/2016

WATERSTONE AT BATON ROUGE
ASSISTED LIVING & MEMORY CARE

SIEGEN LANE
BATON ROUGE, LA 70810

ISSUE: PERMIT SET

©2016 PI ARCHITECTS, INC.

REVISIONS:

DATE: 03/31/2016

PROJECT NUMBER: 14017

SHEET TITLE: ROOF ASSEMBLIES

SHEET: G4.7

BIM Server: SERVER2015 - BIM Server 19/14017 Concordis Baton Rouge | Ver. 19.001 | Friday, April 01, 2016 | 12:04 AM